FK DN 40÷400

PVDF

Butterfly valve

FIP

aliaxis

FK
DN 40÷400

The FK is a butterfly valve for shutting off or regulating flow, with structural characteristics that make it ideal for industrial applications requiring high performance and longterm reliability. This valve is also equipped with the customisable Labelling System.

BUTTERFLY VALVE

- Interchangeable Disk in PVDF with through shaft, available in different thermoplastic materials: PVC-U, PP-H, PVC-C, ABS
- Overall dimensions of the valve in accordance with standard ISO 5752 (DN 40÷200 Medium Series 25, DN 250÷ 300 Long Series 16) and DIN 3202 K2 and ISO 5752 (DN 65÷200 K2, DN 250÷300 K3)
- Can also be installed as an end line valve, bottom discharge valve or tank dump valve
- **Special Lug version** PN 10 fully drilled according to DIN 2501 or ANSI B16.5 cl.150 **with molded-in AISI 316 stainless steel threaded inserts**
- Possibility of installing a manual reducer or pneumatic and/or electric actuators by applying an ISO standard drilling PP-GR flanges. DN 40 ÷ 200 valve equipped with plate with rack in PP-GR. For actuated versions with flange drilled according to ISO 5211 F05, F07, F10. DN 250÷300 valve, fitted with one-piece top flange in high mechanical strength PP-GR with mounting flange for internal components drilled according to standard ISO 5211 F10 (excluding DN 350÷400), F12, F14.
- Possibility to have handle with integrated LSQT limit micro switch, even as a retrofit in existing installations

Technical specifications	
Construction	Bi-directional centric butterfly valve
Size range	DN 40 ÷ 400
Nominal pressure	**Wafer version** **DN 40 ÷ 50:** PN 16 with water at 20° C **DN 65÷250:** PN 10 with water at 20° C **DN 300:** PN 8 with water at 20° C **DN 350:** PN 7 with water at 20° C **DN 400:** PN 6 with water at 20° C **Lug version** **DN 65÷200**: PN 10 with water at 20° C **DN 250÷300**: PN 6 with water at 20° C
Temperature range	0 °C ÷ 100 °C
Coupling standards	**Flanging system**: EN ISO 10931, DIN 2501, ISO 7005-1, EN 1092-1, ASTM B16.5 Cl.150, JIS B2220
Reference standards	**Construction criteria:** EN ISO 16136, EN ISO 10931
	Test methods and requirements: ISO 9393
	Actuator couplings: ISO 5211
Valve material	**Body:** PP-GR **Disk:** PVDF **Stem:** STAINLESS steel AISI 316
Seal material	Liner: FKM. On request EPDM
Control options	Manual control (DN 40÷200); Gearbox, pneumatic actuator, electric actuator

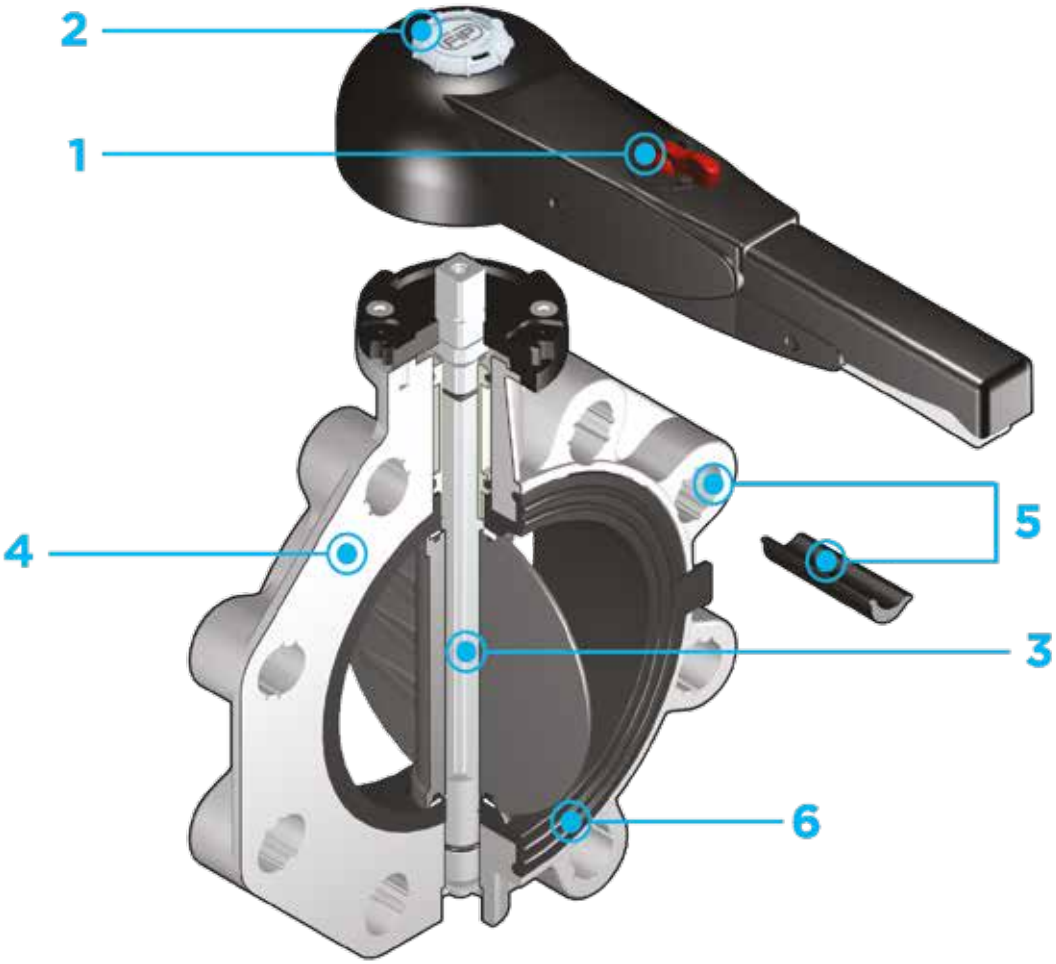

1 **Ergonomic handle** in **HIPVC** equipped with **locking and unlocking device, release, quick operation and graduated adjustment** in 10 intermediate positions (DN 40÷200). The operating range, starting from the first few degrees of valve opening, also guarantees extremely low pressure drops.

2 **Customisable Labelling System:** integrated module in the handle, made of a transparent protection plug and a customisable tag holder using the LSE set (available as an accessory). The **customisation** lets you **identify the valve on the system** according to specific needs.

3 **STAINLESS steel square section stem** completely isolated from the fluid complying with standard ISO 5211:
DN 40÷65: 11 mm
DN 80÷100: 14 mm
DN 125÷150: 17 mm
DN 200: 22 mm
DN 250÷400: 27 mm

4 Body in polypropylene based **compound reinforced with fibreglass** (PP-GR) **resistant to UV rays** and characterised by **high mechanical strength.**

5 **Drilling pattern using oval slots** that allow coupling to flanges according to numerous international standards. The special **self-centring inserts in ABS** supplied for DN 40÷200 guarantee the **correct axial** alignment of the valve during installation. For DN 250÷400 valves, the drilling pattern for the selfcentring system is of the traditional type according to DIN and ANSI standards.

6 **Interchangeable liner** with the dual function of forming a hydraulic seal and isolating the body from the fluid.

TECHNICAL DATA

PRESSURE VARIATION ACCORDING TO TEMPERATURE

For water and harmless fluids to which the material is classified as CHEMICALLY RESISTANT. In other cases, a reduction of the nominal PN pressure is required (25 years with safety factor).

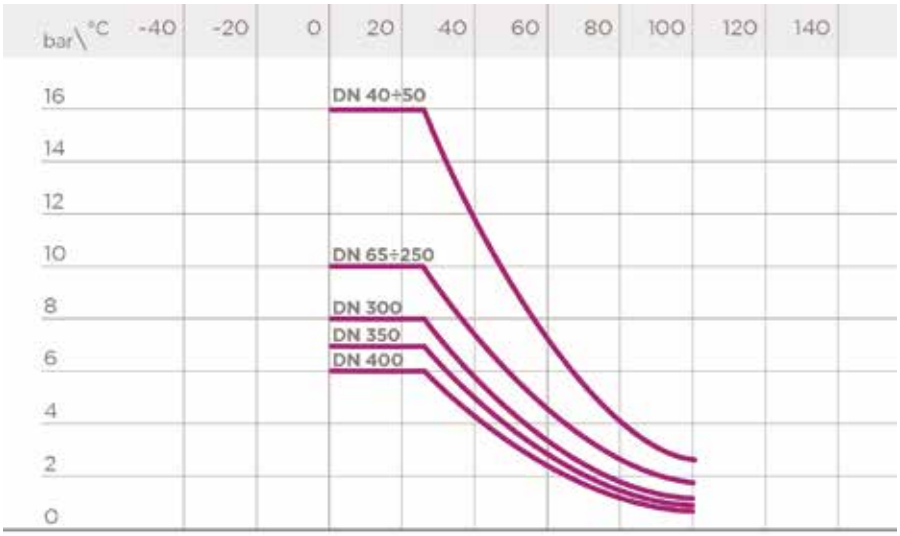

PRESSURE DROP GRAPH

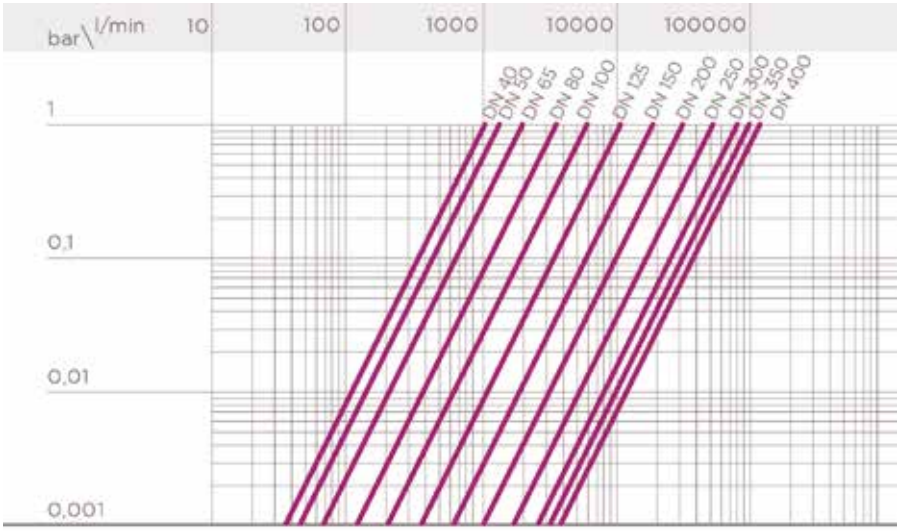

K_v100 FLOW COEFFICIENT DN 40÷200

The K_v100 flow coefficient is the Q flow rate of litres per minute of water at a temperature of 20°C that will generate Δp= 1 bar pressure drop at a certain valve position. The Kv100 values shown in the table are calculated with the valve completely open.

DN	40	50	65	80	100	125	150	200
Kv100 l/min	1000	1285	1700	3550	5900	9850	18700	30500

K_v100 FLOW COEFFICIENT DN 250÷400

The K_v100 flow coefficient is the Q flow rate of litres per minute of water at a temperature of 20°C that will generate Δp= 1 bar pressure drop at a certain valve position. The Kv100 values shown in the table are calculated with the valve completely open.

DN	250	300	350	400
Kv100 l/min	53200	81600	94100	124900

RELATIVE FLOW COEFFICIENT GRAPH

The relative flow coefficient is the flow rate through the valve as a function of the degree of valve opening.
Horizontal axis: Percentage opening of the disk
Vertical axis: Relative flow coefficient

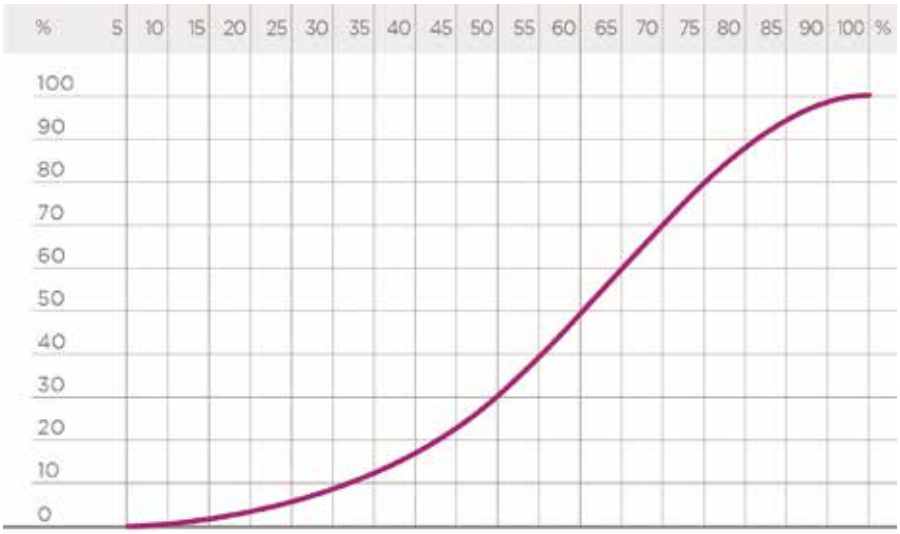

OPERATING TORQUE AT MAXIMUM WORKING PRESSURE

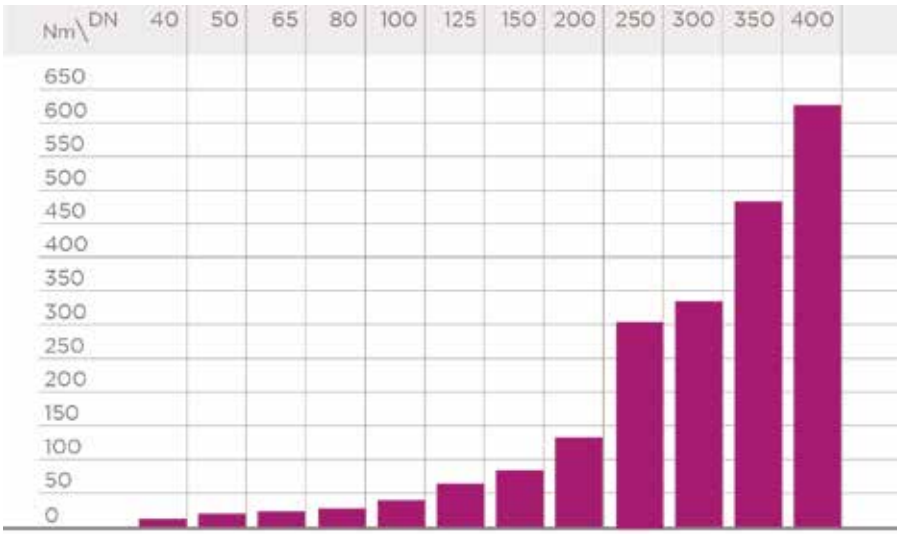

The information in this leaflet is provided in good faith. No liability will be accepted concerning technical data that is not directly covered by recognised international standards. FIP reserves the right to carry out any modification. Products must be installed and maintained by qualified personnel.

DIMENSIONS

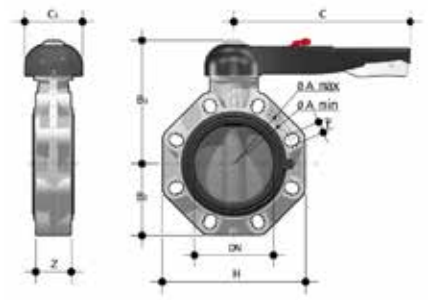

FKOF/LM

Hand operated Butterfly valve

d - Size	DN	PN	A min	A max	B_2	B_3	C	C_1	H	U	Z	g	FKM code
50 - 1"1/2	40	16	99	109	60	137	175	100	132	4	33	1000	FKOFLM050F
63 - 2"	50	16	115	125,5	70	143	175	100	147	4	43	1180	FKOFLM063F
75 - 2"1/2	65	10	128	144	80	164	175	110	165	4	46	1570	FKOFLM075F
90 - 3"	80	10	145	160	93	178	175	100	185	12	49	2020	FKOFLM090F
110 - 4"	100	10	165	190	107	192	272	110	211	8	56	2370	FKOFLM110F
140 - 5"	125	10	204	215	120	212	330	110	240	8	64	3300	FKOFLM140F
160 - 6"	150	10	230	242	134	225	330	110	268	8	70	4100	FKOFLM160F
225 - 8"	200	10	280	298	161	272	420	122	323	8	71	7050	FKOFLM225F

Note: EPDM, NBR (d75-225) primary liner available

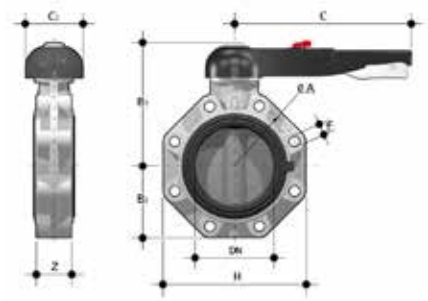

FKOF/LM LUG ISO-DIN

Hand operated Butterfly valve, version Lug ISO-DIN

d	DN	PN	øA	B_2	B_3	C	C_1	f	H	U	Z	g	FKM code
75	65	10	145	80	164	175	110	M16	165	4	46	1970	FKOLFLM075F
90	80	10	160	93	178	175	100	M16	185	12	49	2820	FKOLFLM090F
110	100	10	180	107	192	272	110	M16	211	8	56	3170	FKOLFLM110F
140	125	10	210	120	212	330	110	M16	240	8	64	4900	FKOLFLM140F
160	150	10	240	134	225	330	110	M20	268	8	70	5700	FKOLFLM160F
225	200	10	295	161	272	420	122	M20	323	8	71	8650	FKOLFLM225F

Note: EPDM, NBR (d75-225) primary liner available

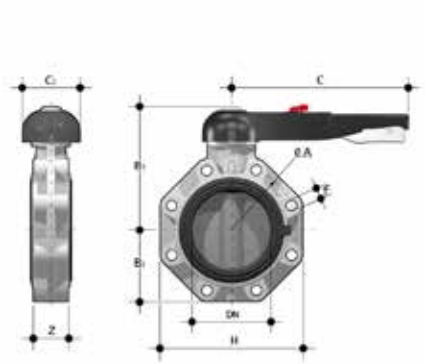

FKOF/LM LUG ANSI

Hand operated Butterfly valve, version Lug ANSI

d	DN	PN	øA	B_2	B_3	C	C_1	f	H	U	Z	g	FKM code
2" 1/2	65	10	139,7	119	80	175	110	5/8"	165	4	46	1970	FKOALFLM212F
3"	80	10	152,4	133	93	175	100	5/8"	185	12	49	2820	FKOALFLM300F
4"	100	10	190,5	147	107	272	110	5/8"	211	8	56	3170	FKOALFLM400F
5"	125	10	215,9	167	120	330	110	3/4"	240	8	64	4900	FKOALFLM500F
6"	150	10	241,3	180	134	330	110	3/4"	268	8	70	5700	FKOALFLM600F
8"	200	10	298,4	227	161	420	122	3/4"	323	8	71	8650	FKOALFLM800F

Note: EPDM, NBR (d 2" 1/2 - 8") primary liner available

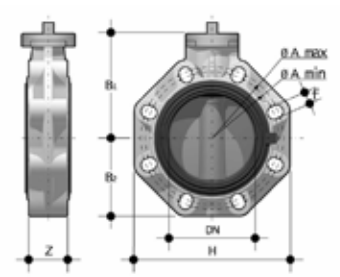

FKOF/FM

Butterfly valve with bare shaft

d - Size	DN	PN	A min	A max	øA	B_1	B_2	f	H	U	Z	g	FKM code
50 - 1"1/2	40	16	99	109	-	106	60	19	132	4	33	674	FKOFFM050F
63 - 2"	50	16	115	125,5	-	112	70	19	147	4	43	854	FKOFFM063F
75 - 2"1/2	65	10	128	144	-	119	80	19	165	4	46	1100	FKOFFM075F
90 - 3"	80	10	145	160	-	133	93	19	185	12	49	1550	FKOFFM090F
110 - 4"	100	10	165	190	-	147	107	19	211	8	56	1900	FKOFFM110F
140 - 5"	125	10	204	215	-	167	120	23	240	8	64	2750	FKOFFM140F
160 - 6"	150	10	230	242	-	180	134	23	268	8	70	3550	FKOFFM160F
225 - 8"	200	10	280	298	-	227	161	23	323	8	71	6300	FKOFFM225F
250	*250	10	-	-	350	248	210	22	405	12	114	13000	FKOFFM280F
280	*250	10	-	-	350	248	210	22	405	12	114	13000	FKOFFM280F
315	*300	8	-	-	400	305	245	22	475	12	114	21000	FKOFFM315F
10"	**250	10	-	-	362	248	210	25,4	405	12	114	13000	FKOAFFM810F
12"	**300	8	-	-	432	305	245	25,4	475	12	114	21000	FKOAFFM812F
355	*350	7	-	460	-	330	280	22	530	16	129	28395	FKOFFM355F
400	*400	6	-	515	-	350	306	26	594	16	169	37295	FKOFFM400F
14"	**350	7	-	476	-	330	280	28,5	530	12	129	28395	FKOAFFM814F
16"	**400	6	-	540	-	350	306	28,5	594	16	169	37295	FKOAFFM816F

FK suitable for flanged JIS K10 wafer installation is also available on request in the size 10" (DN250), 14" (DN350) and 16" (DN400).
*ISO-DIN
**ANSI B.16.5 150
Note: EPDM, NBR (d75-225) primary liner available

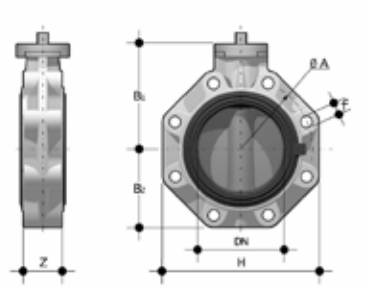

FKOF/FM LUG ISO-DIN

Butterfly valve with bare shaft, version Lug ISO-DIN

d	DN	PN	øA	B_1	B_2	f	H	U	Z	g	FKM code
75	65	10	145	119	80	M16	165	4	46	1500	FKOLFFM075F
90	80	10	160	133	93	M16	185	12	49	2350	FKOLFFM090F
110	100	10	180	147	107	M16	211	8	56	2700	FKOLFFM110F
140	125	10	210	167	120	M16	240	8	64	4350	FKOLFFM140F
160	150	10	240	180	134	M20	268	8	70	5150	FKOLFFM160F
225	200	10	295	227	161	M20	323	8	71	7900	FKOLFFM225F

Note: EPDM, NBR (d75-225) primary liner available

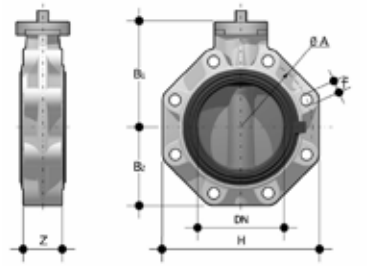

FKOF/FM LUG ANSI

Butterfly valve with bare shaft, version Lug ANSI

d	DN	PN	øA	B_1	B_2	f	H	U	Z	g	FKM code
2" 1/2	65	10	139,7	119	80	5/8"	165	4	46	1500	FKOALFFM212F
3"	80	10	152,4	133	93	5/8"	185	12	49	2350	FKOALFFM300F
4"	100	10	190,5	147	107	5/8"	211	8	56	2700	FKOALFFM400F
5"	125	10	215,9	167	120	3/4"	240	8	64	4350	FKOALFFM500F
6"	150	10	241,3	180	134	3/4"	268	8	70	5150	FKOALFFM600F
8"	200	10	298,4	227	161	3/4"	323	8	71	7900	FKOALFFM800F
10"	250	6	362	248	210	7/8"	405	12	114	17800	FKOALFFM810F
12"	300	6	431,8	305	245	7/8"	475	12	114	25800	FKOALFFM812F

Note: EPDM, NBR (d 2" 1/2 - 8") primary liner available

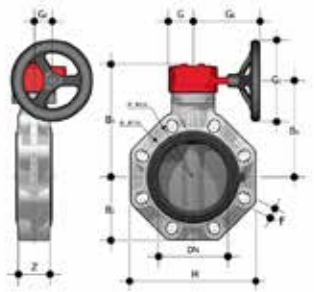

FKOF/RM

Gearbox operated Butterfly valve

d - Size	DN	PN	A min	A max	øA	B_2	B_5	B_6	G	G_1	G_2	G_3	H	U	Z	g	FKM code
75 - 2"1/2	65	10	128	144	-	80	174	146	48	135	39	125	165	4	46	2500	FKOFRM075F
90 - 3"	80	10	145	160	-	93	188	160	48	135	39	125	185	12	49	3050	FKOFRM090F
110 - 4"	100	10	165	190	-	107	202	174	48	135	39	125	211	8	56	3300	FKOFRM110F
140 - 5"	125	10	204	215	-	120	222	194	48	144	39	200	240	8	64	4650	FKOFRM140F
160 - 6"	150	10	230	242	-	134	235	207	48	144	39	200	268	8	70	5450	FKOFRM160F
225 - 8"	200	10	280	298	-	161	287	256	65	204	60	200	323	8	71	9600	FKOFRM225F
*280	250	10	-	-	350	210	317	281	88	236	76	250	405	12	114	19600	FKOFRM280F
*315	300	8	-	-	400	245	374	338	88	236	76	250	475	12	114	27600	FKOFRM315F
**10"	250	10	-	-	362	210	317	281	88	236	76	250	405	12	114	19600	FKOAFRM810F
**12"	300	8	-	-	432	245	374	338	88	236	76	250	475	12	114	27600	FKOAFRM812F
*355	350	7	-	-	460	280	438	390	88	361	80	300	530	16	129	36845	FKOFRM355F
*400	400	6	-	-	515	306	438	390	88	361	80	300	594	16	169	45745	FKOFRM400F
**14"	350	7	-	-	460	280	438	390	88	361	80	300	530	16	129	36845	FKOAFRM814F
**16"	400	6	-	-	515	306	438	390	88	361	80	300	594	16	169	45745	FKOAFRM816F

FK suitable for flanged JIS K10 wafer installation is also available on request in the size 10" (DN250), 14" (DN350) and 16" (DN400).
*ISO-DIN
**ANSI B.16.5 150
Note: EPDM, NBR (d75-225) primary liner available

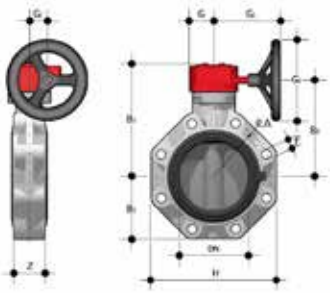

FKOM/RM LUG ISO-DIN

Gearbox operated Butterfly valve, version Lug ISO-DIN

d	DN	PN	øA	B_2	B_5	B_6	f	G	G_1	G_2	G_3	H	U	Z	g	FKM code
75	65	10	145	80	174	146	M16	48	135	39	125	165	4	46	2900	FKOLFRM075F
90	80	10	160	93	188	160	M16	48	135	39	125	185	12	49	3750	FKOLFRM090F
110	100	10	180	107	202	174	M16	48	135	39	125	211	8	56	4100	FKOLFRM110F
140	125	10	210	120	222	194	M16	48	144	39	200	240	8	64	6250	FKOLFRM140F
160	150	10	240	134	235	207	M20	48	144	39	200	268	8	70	7050	FKOLFRM160F
225	200	10	295	161	256	256	M20	65	204	60	200	323	8	71	11200	FKOLFRM225F

Note: EPDM, NBR (d75-225) primary liner available

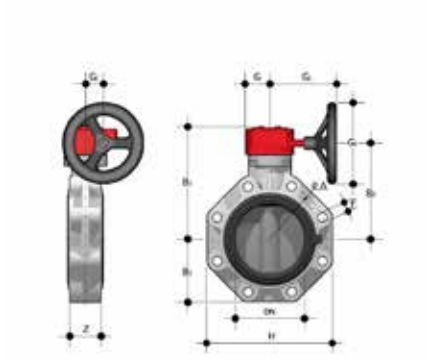

FKOF/RM LUG ANSI

Gearbox operated Butterfly valve, version Lug ANSI

d	DN	PN	øA	B_2	B_5	B_6	f	G	G_1	G_2	G_3	H	U	Z	g	FKM code
2" 1/2	65	10	139,7	80	174	146	5/8"	48	135	39	125	165	4	46	2900	FKOALFRM212F
3"	80	10	152,4	93	188	160	5/8"	48	135	39	125	185	12	49	3750	FKOALFRM300F
4"	100	10	190,5	107	202	174	5/8"	48	135	39	125	211	8	56	4100	FKOALFRM400F
5"	125	10	215,9	120	222	194	3/4"	48	144	39	200	240	8	64	6250	FKOALFRM500F
6"	150	10	241,3	134	235	207	3/4"	48	144	39	200	268	8	70	7050	FKOALFRM600F
8"	200	10	298,4	161	287	256	3/4"	65	204	60	200	323	8	71	11200	FKOALFRM800F
10"	250	6	362	210	317	281	7/8"	88	236	76	250	405	12	114	24400	FKOALFRM810F
12"	300	6	431,8	245	374	338	7/8"	88	236	76	250	475	12	114	32450	FKOALFRM812F

Note: EPDM, NBR (d 2" 1/2 - 8") primary liner available

ACCESSORIES

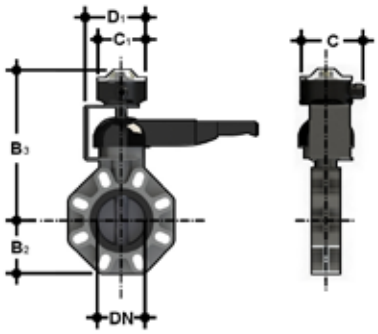

LS Quick Kit

The Limit Switch Quick Kit allows the fast and secure installation of the FIP LSQT module to the FK/LM valves. The kit can be assembled on the valve even if already installed on the system. For technical data of the LSQT box see FIP actated valves catalogue.

DN	B_2	B_3	C	C_1	D_1	Code
40	60	260,5	126,9	103	123,5	LSQKITFK5063
50	70	266,5	126,9	103	123,5	LSQKITFK5063
65	80	273,5	126,9	103	123,5	LSQKIT75160
80	93	287,5	126,9	103	123,5	LSQKIT75160
100	107	301,5	126,9	103	123,5	LSQKIT75160
125	120	321,5	126,9	103	123,5	LSQKIT75160
150	134	334,5	126,9	103	123,5	LSQKIT75160
200	161	385	126,9	103	129,8	LSQKIT225

LSE

Customisation and label printing set for Easyfit handle made up of precut adhesive sheets and software for guided label creation.

DN	FE*- FK* code
40	LSE040
50	LSE040
65	LSE040
80	LSE040
100	LSE040
125	LSE040
150	LSE040
200	LSE040

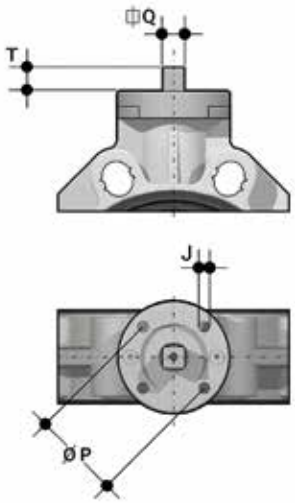

Actuator mounting flange

The valve can be equipped with standard pneumatic or electric actuators and gearbox for heavy-duty operations, using a flange in PP-GR reproducing the drilling pattern provided for by standard ISO 5211.

DN	J	P	Ø	T	Q
40	7	50	F 05	12	11
50	7	50	F 05	12	11
65	7/9	50/70	F 05/F 07	12	11
80	9	70	F 07	16	14
100	9	70	F 07	16	14
125	9	70	F 07	19	17
150	9	70	F 07	19	17
200	11	102	F 10	24	22
200	11	102	F 10	24	22
250	11/13/17	102/125/140	F 10/ F 12/ F 14	29	27
300	11/13/17	102/125/140	F 10/ F 12/ F 14	29	27
350	14/18	125/140	F 12/ F 14	29	27
400	14/18	125/140	F 12/ F 14	29	27

CUSTOMISATION

Fig. 1

Fig. 2

The FK valve is equipped with the customisable Labelling System.
This system lets you create special labels to insert in the handle. This makes it extremely easy to apply company logos, identification serial numbers or service indications such as, for example, the valve function in the system, the transported fluid, but also specific information for customer service, such as the customer name or installation date or location on the valves.
The specific LCE module is a standard supply and is made up of a rigid transparent water-resistant PVC plug (A-C) and white tag holder (B) made of the same material, one side of which bears the FIP logo (fig. 1).
The tag holder, inserted in the plug, can be removed and, once overturned, used for customisation by applying labels printed with the software supplied with the LSE set.
Proceed as follows to apply the label on the valve:

1) Remove the upper part of the transparent plug (A) rotating it counter-clockwise as indicated by the word "Open" on the plug and remove it.
2) Extract the tag holder from its housing on the lower part of the plug (C).
3) Apply the adhesive label on the holder (B) to align the profiles matching the tab position.
4) Reinsert the tag holder in its housing at the bottom of the plug.
5) Reposition the top of the plug in the housing rotating it clockwise; this way the label is protected against the elements.

COMPONENTS

EXPLODED VIEW DN 40÷65

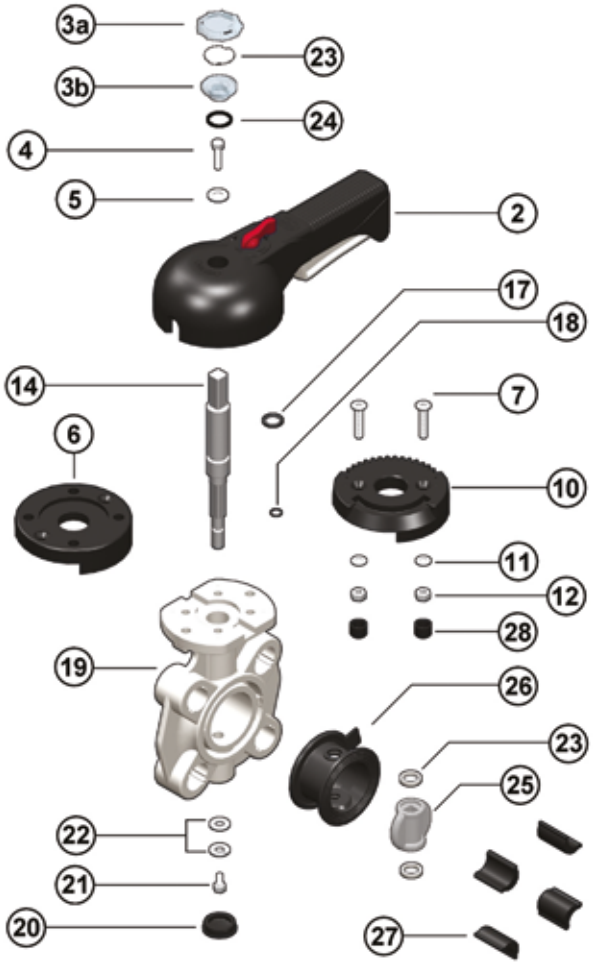

1	Position indicator (PA - 1)
2	Handle (HIPVC - 1)
3a/b	Transparent protection plug (PVC - 1)
4	Fastening screw (STAINLESS steel - 1)
5	Washer (STAINLESS steel - 1)
6	Flange (PP-GR - 1)
7	Screw (STAINLESS steel - 2)
8	Tag holder (PVC-U - 1)
9	O-Ring (NBR - 1)
10	Plate (PP-GR - 1)
11	Washer (STAINLESS steel - 2)
12	Nut (STAINLESS steel - 2)
14	Stem (STAINLESS steel 316 - 1)
17	Stem O-Ring (FKM - 1)
18	Stem O-Ring (FKM - 1)
19	Body (PP-GR - 1)
20	Protection plug (PE - 1)
21	Screw (STAINLESS steel - 1)
22	Washer (STAINLESS steel - 2)
23	Anti-friction ring (PTFE - 2)
25	Disk (PVDF- 1)
26	Liner (FKM - 1)
27	Inserts (ABS - 4-8)
28	Plug (PE - 2)

The component material and quantity supplied are indicated in the parentheses.

EXPLODED VIEW DN 80÷200

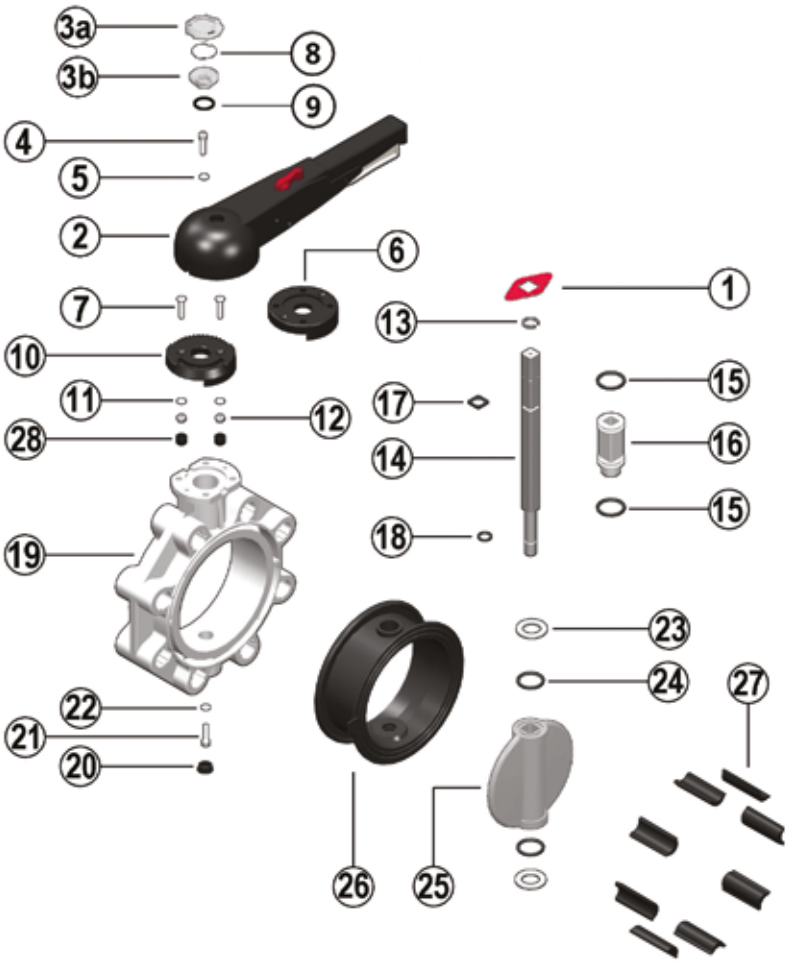

1	Position indicator (PA - 1)	**9**	O-Ring (NBR - 1)	**19**	Body (PP-GR - 1)
2	Handle (HIPVC - 1)	**10**	Plate (PP-GR - 1)	**20**	Protection plug (PE - 1)
3a/b	Transparent protection plug (PVC - 1)	**11**	Washer (STAINLESS steel - 2)	**21**	Screw (STAINLESS steel - 1)
4	Fastening screw (STAINLESS steel - 1)	**12**	Nut (STAINLESS steel - 2)	**22**	Washer (STAINLESS steel - 2)
5	Washer (STAINLESS steel - 1)	**13**	Seeger ring (STAINLESS steel - 1)	**23**	Anti-friction ring (PTFE - 2)
6	Flange (PP-GR - 1)	**14**	Stem (STAINLESS steel 316 - 1)	**24**	Disk O-Ring (FKM - 2)
7	Screw (STAINLESS steel - 2)	**15**	Bush O-Ring (FKM - 2)	**25**	Disk (PVDF- 1)
8	Tag holder (PVC-U - 1)	**16**	Bush (Nylon - 1)	**26**	Liner (FKM - 1)
		17	Stem O-Ring (FKM - 1)	**27**	Inserts (ABS - 4-8)
		18	Stem O-Ring (FKM - 1)	**28**	Plug (PE - 2)

The component material and quantity supplied are indicated in the parentheses.

EXPLODED VIEW DN 250÷300

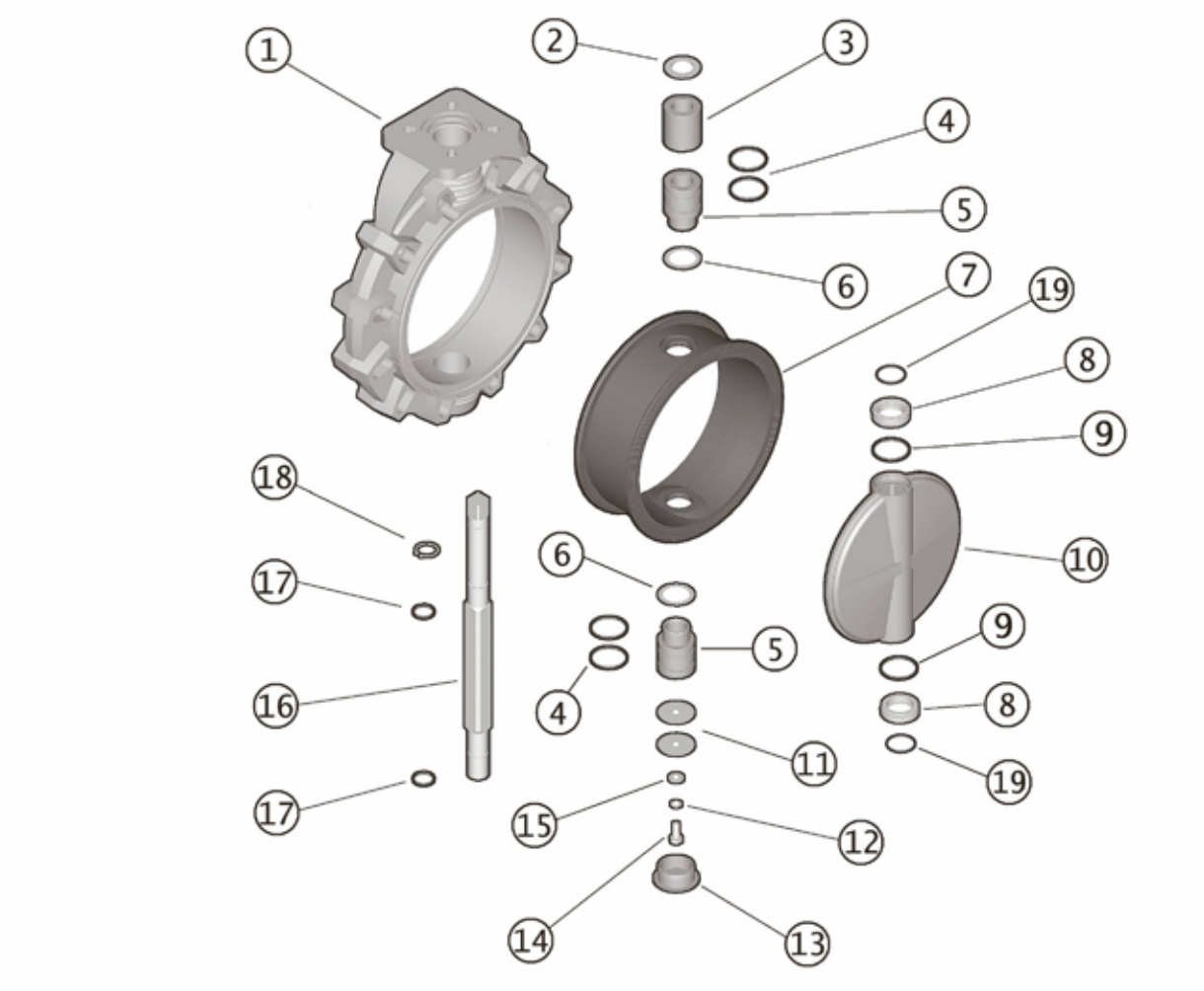

1 Body (PP-GR - 1)
2 Washer (STAINLESS steel - 1)
3 Bush (PP - 1)
4 Bush O-Ring (FKM - 4)
5 Bush (PP - 2)
6 Washer (PTFE - 2)
7 Liner (FKM - 1)
8 Anti-friction ring (PTFE - 2)
9 Disk O-Ring (FKM - 2)
10 Disk (PVDF - 1)
11 Washer (STAINLESS steel - 2)
12 Washer (STAINLESS steel - 1)
13 Protection plug (PE - 1)
14 Screw (STAINLESS steel - 1)
15 Washer (STAINLESS steel - 1)
16 Stem (STAINLESS steel 316 - 1)
17 Stem O-Ring (FKM - 2)
18 Seeger ring (STAINLESS steel - 1)
19 O-Ring (FKM - 2)

The component material and quantity supplied are indicated in the parentheses.

EXPLODED VIEW DN 350÷400

1	Body (PP-GR - 1)	**8**	Anti-friction ring (PTFE - 2)	**16**	Stem (STAINLESS steel 316 - 1)
2	Washer (STAINLESS steel - 1)	**9**	Disk O-Ring (FKM - 2)	**17**	Stem O-Ring (FKM - 2)
3	Bush (PP-H - 1)	**10**	Disk (PVDF - 1)	**18**	Seeger ring (STAINLESS steel - 1)
4	Bush O-Ring (EPDM or FKM - 6)	**11**	Washer (STAINLESS steel - 1)	**20**	Gearbox (Al, Steel - 1)
5	Bush (PP-H - 1)	**12**	Washer (STAINLESS steel - 1)	**21**	Pin (STAINLESS steel - 2)
6	Washer (PP-H - 2)	**13**	Protection plug (PE - 1)	**22**	Washer (STAINLESS steel - 1)
7	Liner (FKM - 1)	**14**	Screw (STAINLESS steel - 1)	**23**	Position indicator (PA - 1)

The component material and quantity supplied are indicated in the parentheses.

DISASSEMBLY

DN 40÷200

1) Remove the LCE module consisting of the rigid transparent PVC plug (3a-3b) and white tag holder (8) and remove screw (2) and washer (3) (fig.3).
2) Remove the handle (2).
3) Remove the screws (7) and plate (10) from the body (19).
4) Remove the protection plug (20) and screw (21) with the washer (22).
5) Extract the stem (14) and disk (25).
6) Remove the anti-friction rings (23) and (DN 65÷200 only) O-Rings (24).
7) Remove the liner (26) from the body (19).
8) Remove the Seeger ring (13) and (DN 65÷200 only) guide bush (16).
9) Remove (DN 65÷200 only) the O-Rings (15) and (17, 18).

DN 250÷300

1) Remove the protection plug (13) and screw (14) with the washers (11-15).
2) Extract the stem (16) and disk (10).
3) Remove the seal (7) from the body (1).
4) Remove the Seeger ring (18) and guide bushes (5-3) with washer (2).
5) Extract the lower bush (5).
6) Remove O-Rings (4) and (17).

DN 350÷400

1) Remove the position indicator (23) from the stem (16).
2) Remove the protection plug (13) from the body (1).
3) Remove the screw (14) and the washers (11) and (22).
4) Extract the stem unit (16) from the disk.
5) Extract the lower bush unit (5) from the lower part of the body (1).
6) Remove the disk unit (10) from the body (1).

ASSEMBLY

DN 40÷200

1) Place the liner (26) on the body (19).
2) Insert the O-Rings (17) and (18) on the stem (14).
3) Insert the O-Rings (15) on the guide bush (16) and the bush on the stem. Lock the bush using the Seeger ring (13).
4) Position the O-Rings (24) and then the anti-friction rings (23) on the disk (25) and the disk inside the body, after having lubricated the liner (26).
5) Insert the through stem (14) in the body (19) and disk (25).
6) Tighten screw (21) with washer (22) and insert the protection plug (20).
7) Position the plate (10) on the body (19) and tighten screws (7).
8) Position the handle (2) on the stem (14).
9) Tighten screw (4) with washer (5) and replace the LCE module consisting of the rigid transparent PVC plug (3a-3b) and white tag holder (8).

DN 250÷300

1) Place the liner (7) on the body (1).
2) Insert the O-Rings (4) and washer (6) on bushes (5).
3) Insert the O-Rings (17) on the stem (16); insert the upper bush (5), bush (3), washer (2) on the stem and fix them with Seeger ring (18).
4) Insert the seals (19-9) on the antifriction rings (8).
5) Position the washers (8) in the housings on the disk (10), and the disk inside the body (1) after having lubricated the liner (7).
6) Insert the through stem (16) in the body and disk.
7) Position the lower bush (5) from below.
8) Tighten screws (14) with washers (11-15) and insert the protection plug (13).

DN 350÷400

1) Insert the lower bush (5) complete with O-rings (4) on the body (1), subsequently inserting the gland packing washer (6) between the bush and the body.
2) Insert the second gland packing washer (6) on the liner (7) and fit these inside the body (1).
3) Insert the O-rings (9) and anti-friction rings (8) on the disks (10).
4) Lubricate the disk (10) and insert it into the liner (7).
5) Insert the upper bush complete with O-rings (3 + 4) on the stem (16) joined to the O-rings (17); insert the washer (2) above the upper bush (3) and insert Seeger ring (18) in the appropriate housing on the stem (16). Insert this unit in the body's upper hole (1).
6) Overlap washer (22) on washer (11) equipped with pins (21), and insert this unit on the lower part of the stem (16), fastening it with screw (14) and locking washer (12).
7) Insert the protection plug (13) on the body (1).
8) Insert the position indicator (23) on the upper part of the stem (16).

Note: during assembly operations, it is advisable to lubricate the rubber seals. Mineral oils are not recommended for this task as they react aggressively with EPDM rubber.

Fig. 3

INSTALLATION

JOINTS

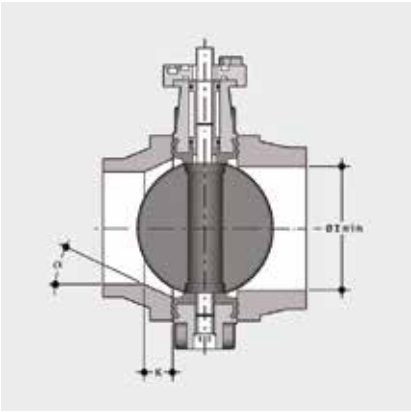

Before proceeding with the installation of the stubs, check that the bore of the fittings has sufficient clearance to allow the valve disk to open correctly. Also check the maximum coupling distance for the liner. Before proceeding with the installation of the FK valve, check that the bore of the stub allows the correct opening of the disk.

DN	l min.
40	25
50	28
65	47
80	64
100	84
125	108
150	134
200	187
250	225
300	280
350	324
400	362

PP-PE STUBS

For the installation of PP-PE stubs, for butt welding a short spigot or electrofusion/butt welding a long spigot, check the valve-stub-flange couplings and the K - a chamfer dimensions where necessary according to the different SDR's in the following table.

	d	DN	50 40	63 50	75 65	90 80	110 100	125 100	140 125	160 150	180 150	200 200	225 200	250 250	280 250	315 300	355 350	400 400
FK	50	40																
	63	50																
	75	65																
	90	80																
	110	100																
	140	125																
	160	150																
	225	200																
	280	250																
	315	300																
	355	350																
	400	400																
SDR		17/17,6										k=26,5 a=20°		k=15,7 a=25°		k=13,3 a=25°	k=45 a=25°	k=55 a=25°
		11								k=35 a=20°		k=35 a=25°	k=40 a=15°	k=32,5 a=25°	k=35 a=25°	k=34,5 a=25°	k=55 a=25°	k=80 a=25°
		7,4				k=10 a=35°	k=15 a=35°		k=20 a=30°	k=35 a=20°	k=15 a=35°	k=40 a=20°	k=35 a=30°	k=55 a=30°	k=35 a=30°	k=65 a=30°		
		33															k=17 a=30°	k=25 a=35°

Short/long spigot stubs according to EN ISO 15494 and DIN 16962/16963 and flange

POSITIONING THE INSERTS

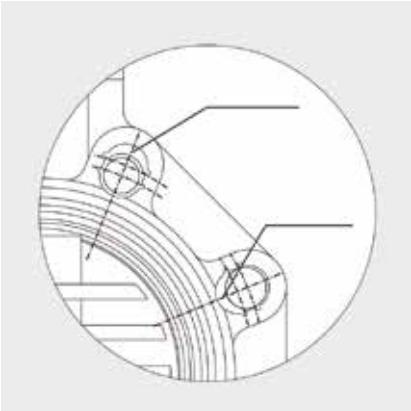

Place the inserts in the holes according to the positions indicated in the table, from the side corresponding to the letters D and DN in order to facilitate the insertion of the stud-bolts and the coupling with the flanges (DN 40 ÷ 200). The self-centring inserts must be inserted in the guides in the slots in the valve body on the side with the writing, with the writing facing upwards, and positioned according to the type of flange drilling, as indicated in the following table:

DN	DIN 2501 PN6, EN1092-1, BS4504 PN6, DIN 8063 PN6	DIN 2501 PN10/16, EN1092-1, BS 4504 PN10/16, DIN 8063 PN10/16, EN ISO 15493	BS 10 table A-D-E Spec D-E	BS 1560 cl.150 ANSI B16.5 cl.150*	JIS B 2220 K5	JIS 2211 K10**
40	Pos.1	Pos. 2	Pos. 1	Pos. 1	Pos. 1	-
50	Pos.1	Pos. 2	Pos. 1	-	N/A	-
65	Pos.1	Pos. 2	Pos. 1	Pos. 2	Pos. 1	Pos. 2
80	Pos.1	Pos. 2	Pos. 1	Pos. 2	Pos. 1	Pos. 1
100	Pos.1	Pos. 2	Pos. 1	Pos. 2	Pos. 1	Pos. 1
125	Pos.1	Pos. 2	Pos. 1	Pos. 2	Pos. 1	-
150	Pos.1	Pos. 2	Pos. 1	Pos. 2	Pos. 1	Pos. 2
200	Pos.1	PN 10 Pos. 2	Pos. 2	Pos. 2	Pos. 1	N/A

* DN 50 without inserts

** DN 40, 50, 125 without inserts

POSITIONING THE VALVE

Position the valve between two flanged stubs, taking care to respect the installation tolerances Z. It is advisable to always install the valve with the disk partially closed (it must not exit the body) and avoid any misalignment of the flanges, as this would cause
leaks. Where possible comply with the following requirements:
- Conveying dirty fluids: position the valve with the stem inclined at an angle of 45° to the pipe support plane.
- Conveying fluids with sediment: position the valve with the stem parallel to the pipe support plane.
- Conveying clean fluids: position the valve with the stem perpendicular to the pipe support plane.

JIS FLANGED OPTIONS

FK suitable for flanged JIS K10 wafer installation is also available on request in the size 10" (DN250), 14" (DN350) and 16" (DN400) and in JIS K5 in the size of 10" (DN250) and 12" (DN300)

TIGHTENING THE STUD-BOLTS

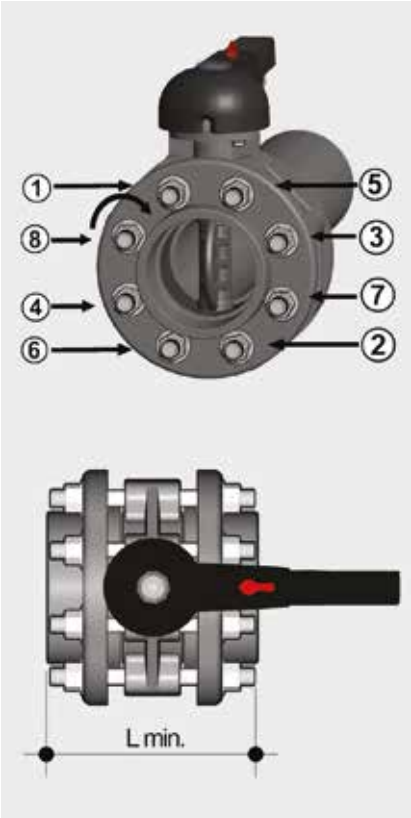

Before tightening the stud-bolts, it is advisable to open the disk in order to prevent damage to the seal. Tighten the stud-bolts in a uniform manner, in the order indicated in the figure, to the nominal operating torque value indicated in the table. The stud-bolts do not need to be excessively tightened in order to produce a perfect hydraulic seal. Overtightening could adversely affect the operating torque of the valve.

DN	L min.	*Nm
40	M16 x 150	9
50	M16 x 150	12
65	M16 x 170	15
80	M16 x 180	18
100	M16 x 180	20
125	M16 x 210	35
150	M20 x 240	40
200	M20 x 260	55
250	M20 x 310	70
300	M20 x 340	70
350	M20 x 360	75
400	M24 x 420	75

* Tightening torques for nuts and bolts on couplings with backing rings.
Values required to obtain the hydraulic test seal (1.5xPN at 20°C) (new or lubricated nuts and bolts)

HANDLE LOCK

Thanks to the multifunctional handle and the red manoeuvre button on the lever, you can perform a 0°-90° operation and a graduated operation by means of the 10 intermediate positions and a stop lock: the handle can be locked in each of the 10 positions by
simply pressing the Free-lock button. Alock can also be installed on the handle to protect the system against tampering.
The valve is two-way and can be installed in any position. It can also be installed at end line or tank.

WARNINGS ⚠

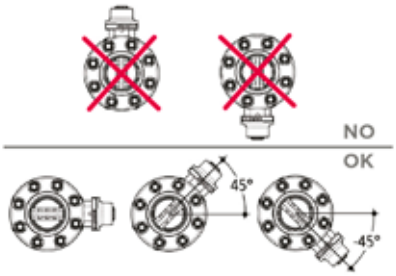

Make sure that the valves installed on the system are suitably supported for their weight.
Always avoid sudden closing manoeuvres and protect the valve from accidental operations. To this end, it is advisable to install a reduction gear, available on request.
In the case of dirty fluids or those with sediments, install the valve inclined as shown in the figure.